MEM Bath spout without diverter for free-standing assembly - Dark Chrome

MEM

13 672 780

- 280mm projection
- cascade
- total height 830 - 900 mm
- height up to aerator 665 – 735 mm
- push-on rosette 130 x 130 mm
- max. flow 47.8 l/min at 3 bar flow pressure
- WRAS

Dark Chrome	13 672 780-19
Chrome	13 672 780-00
Brushed Platinum	13 672 780-06
Platinum	13 672 780-08
Brushed Durabrass (23kt Gold)	13 672 780-28
Brushed Champagne (22kt Gold)	13 672 780-46
Champagne (22kt Gold)	13 672 780-47

MEM Bath spout without diverter for free-standing assembly - Dark Chrome

13 672 780

mm [inches]

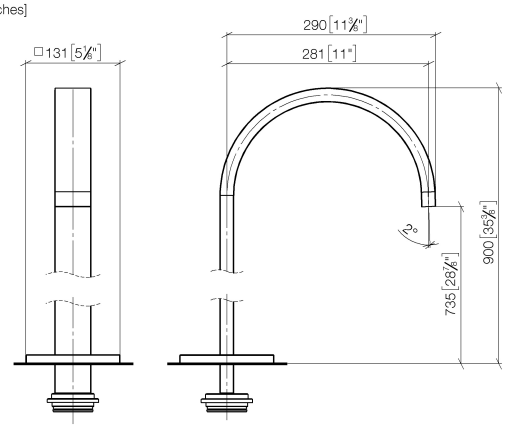

Flow rate chart

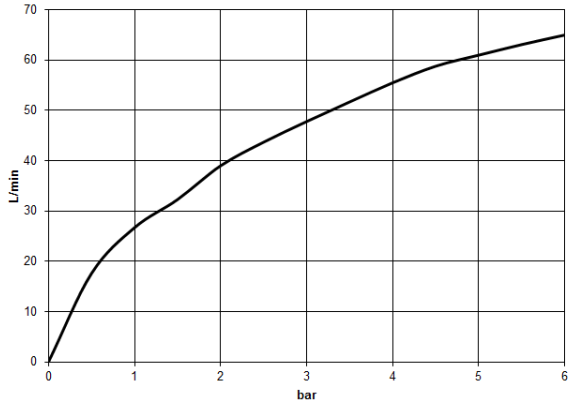

Codes & Standards

DIN 4109	ISO 3822	Ü-Zeichen

MEM Bath spout without diverter for free-standing assembly - Dark Chrome

13 672 780

Certificates

LGA_18

MEM Bath spout without diverter for free-standing assembly - Dark Chrome

13 672 780
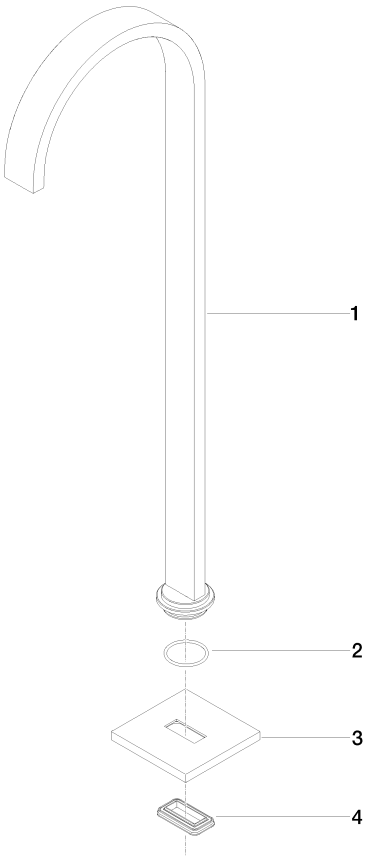
Parts for other finishes can be found here: Chrome